Quiz #9 EE 420/ECG 620 Spring 2020 Name:_____

Open book and closed notes.

Show your work for credit and place a box around each of your answers.

For the 1 um book process used below: V_{THN} = 800 mV, V_{THP} = 900 mV, KP_n = 120 uA/V^2, and KP_p = 40 uA/V^2.
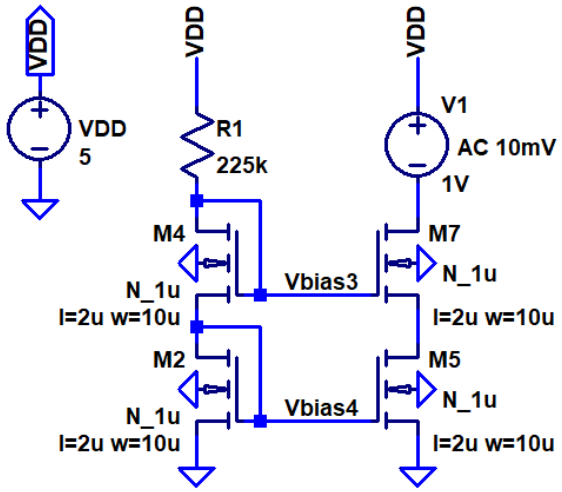
1. What is the DC voltage on the drain of M7? Calculate the DC and AC currents in M5. (5 points)